IL CALORE A PORTATA DI MANO

Aneto | ELECTRICAL TOWEL WARMER

EN INSTALLATION INSTRUCTION

TECHNICAL DRAWING

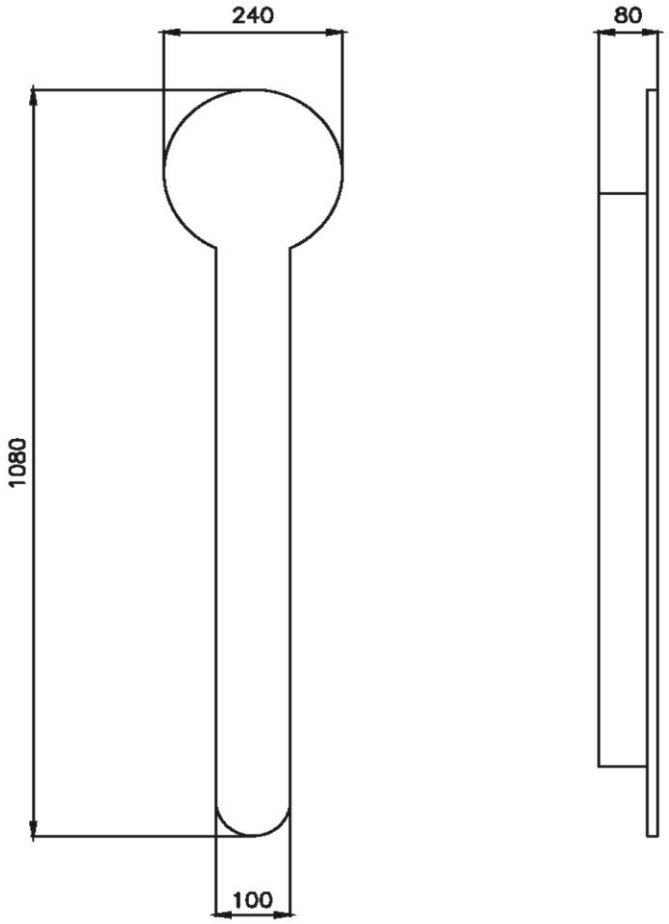

ENGLISH

TECHNICAL DATA

VOLTAGE: 230 VOLT 50 Hz

NOMINAL POWER: 100 W

CLASS 1 ELECTRICAL APPLIANCE

PROTECTION CLASS: IP24

STANDARD REFERENCE: EN60335-1; EN60335-2-43

CE

HARDWARE TOOL

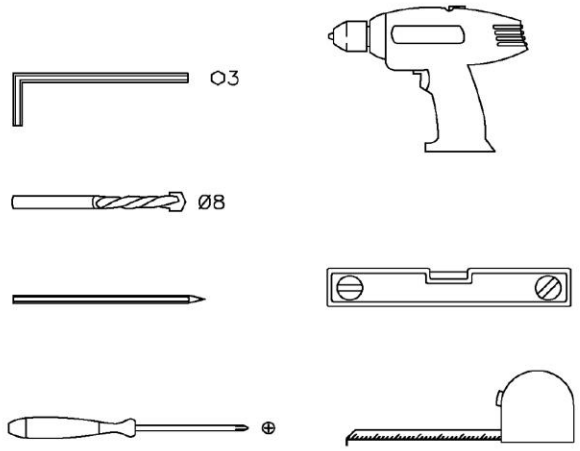

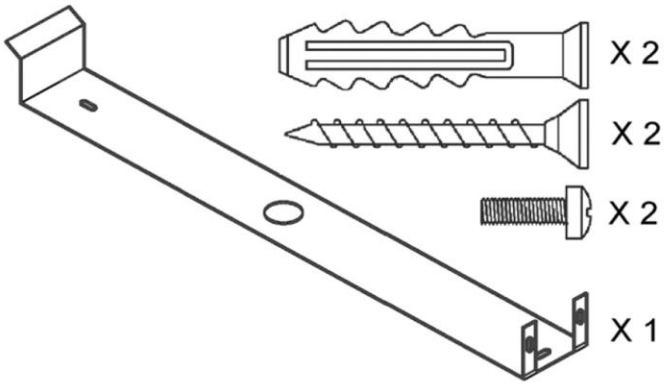

SAFE POSITIONING

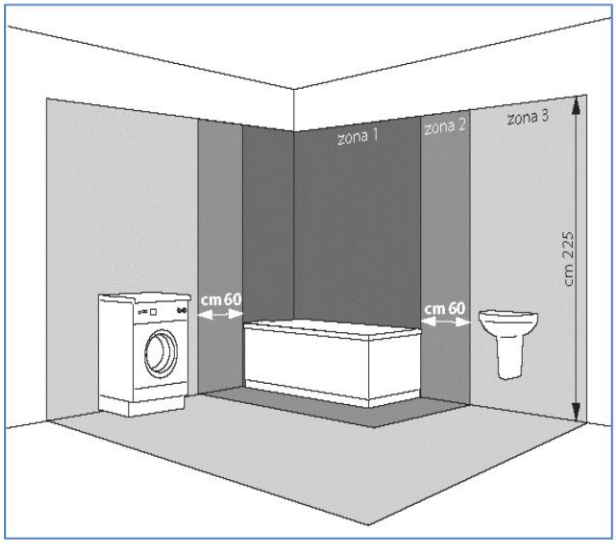

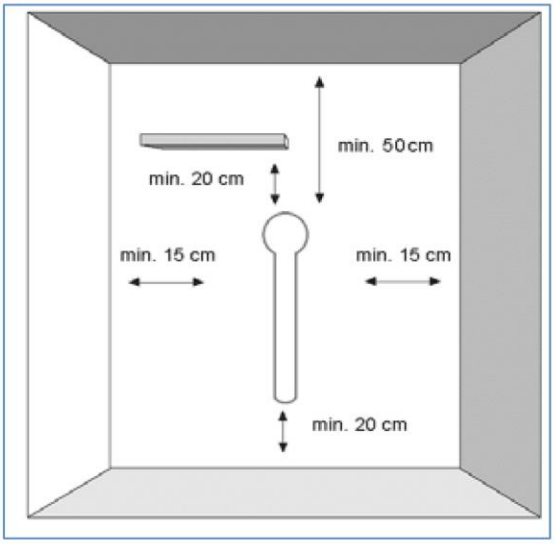

Fig. A

ISTALL ONLY IN ZONE 3

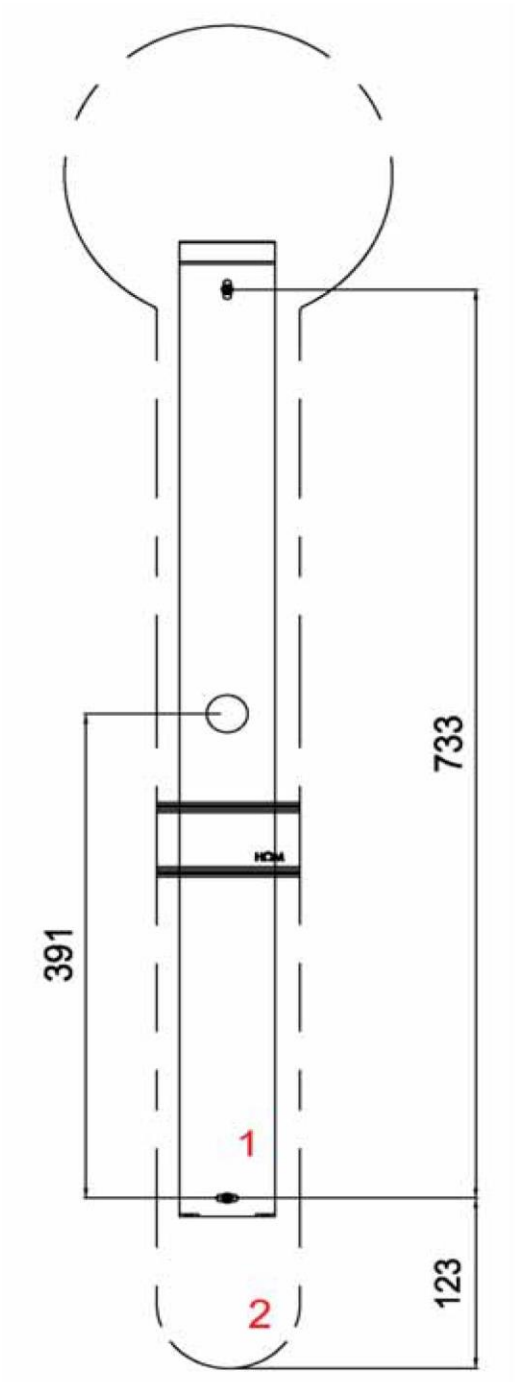

1:Wall bracket

2: Ceramic h eater

WALL INSTALLATION MEASURMENTS

HOM
IL CALORE A PORTATA DI MANO

1S

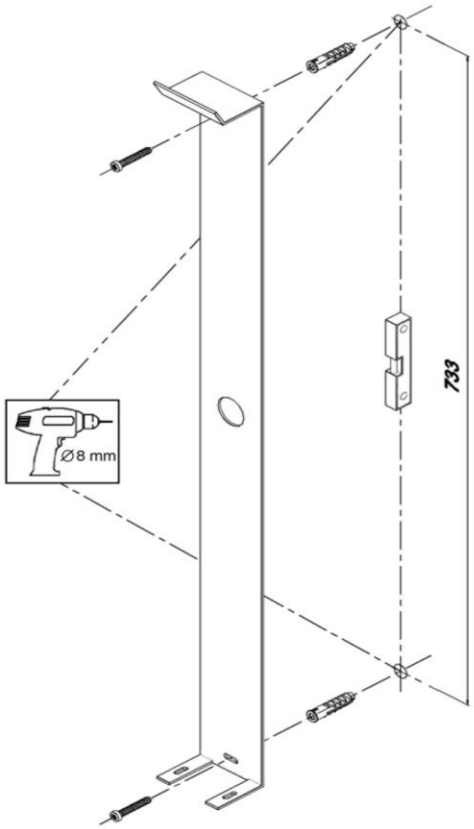

2S

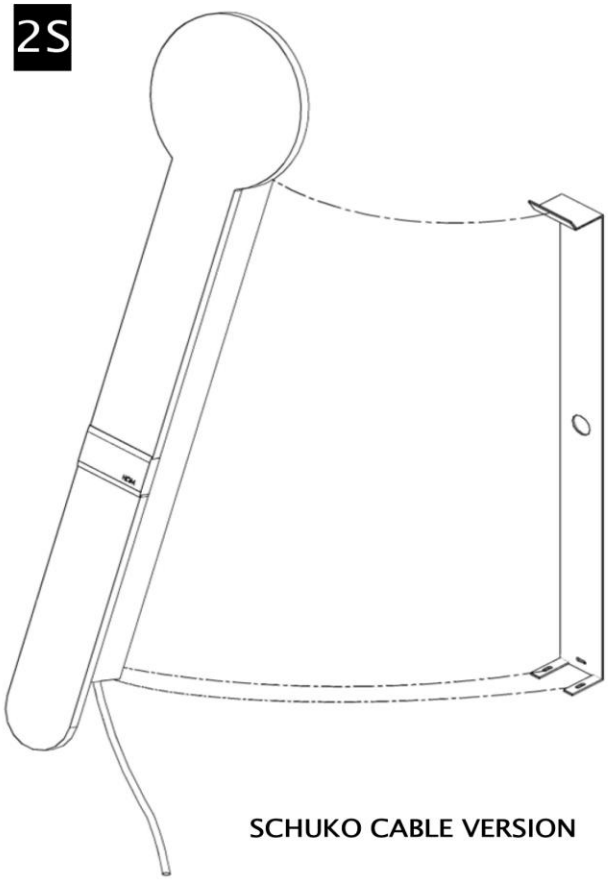

SCHUKO CABLE VERSION

1W

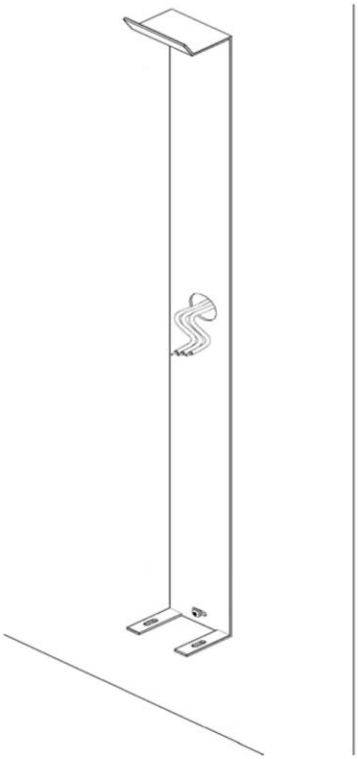

2W

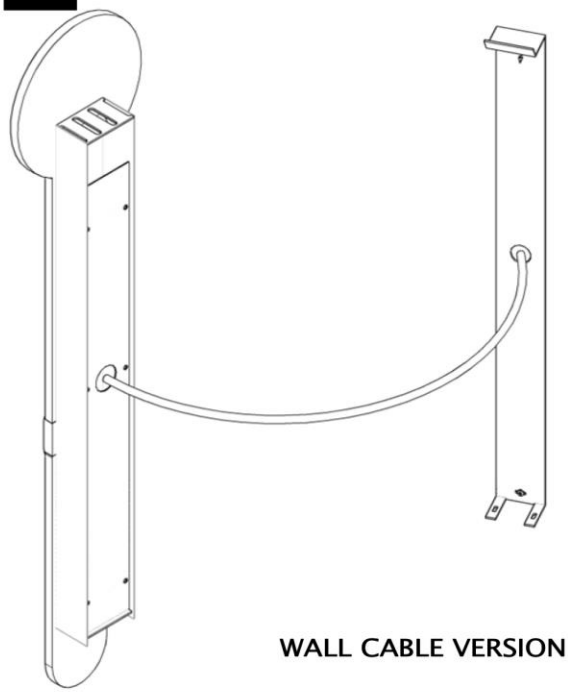

WALL CABLE VERSION

3

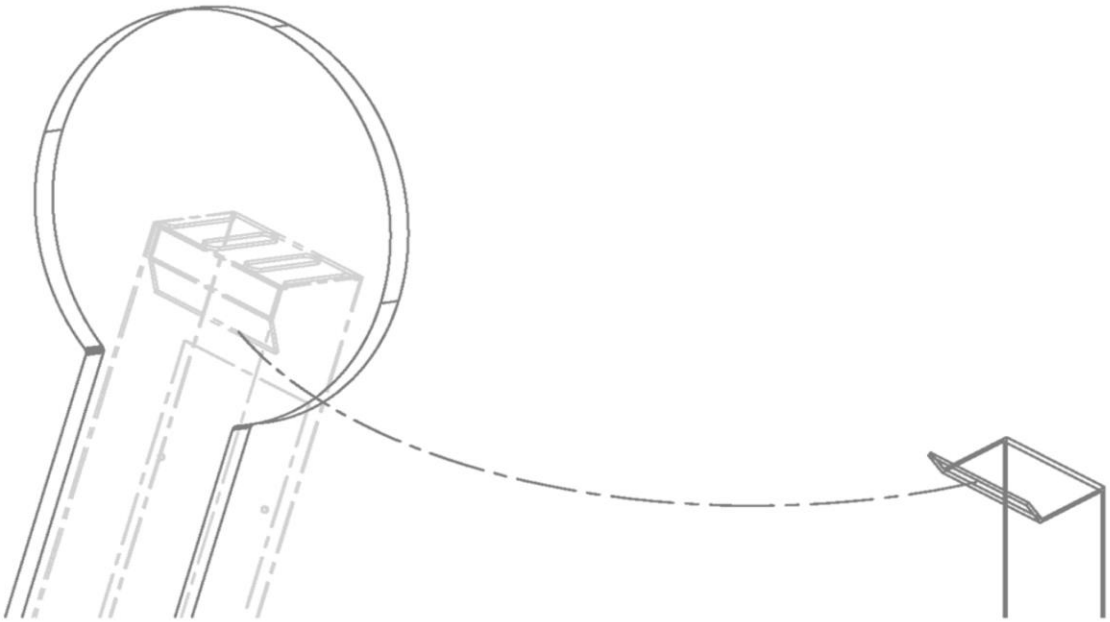

4

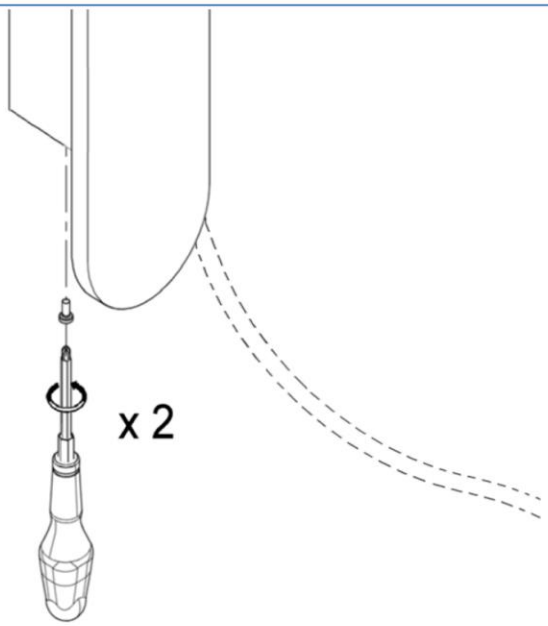

F

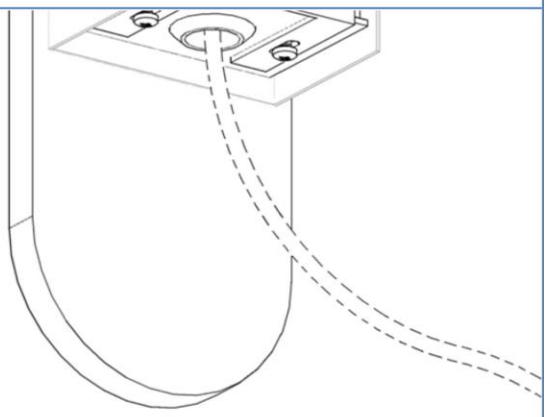

ON/OFF MODEL

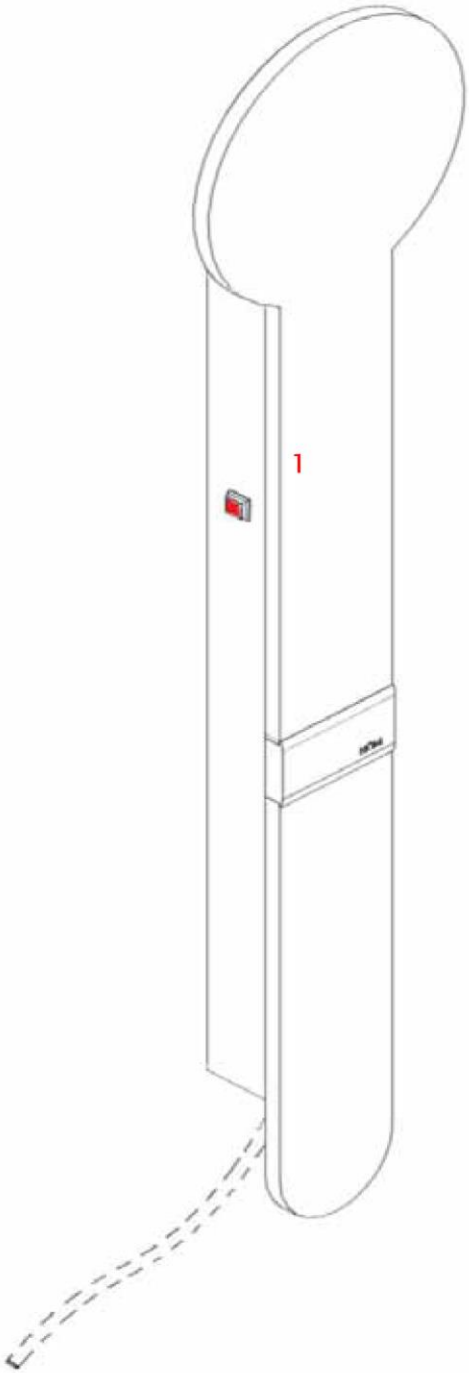

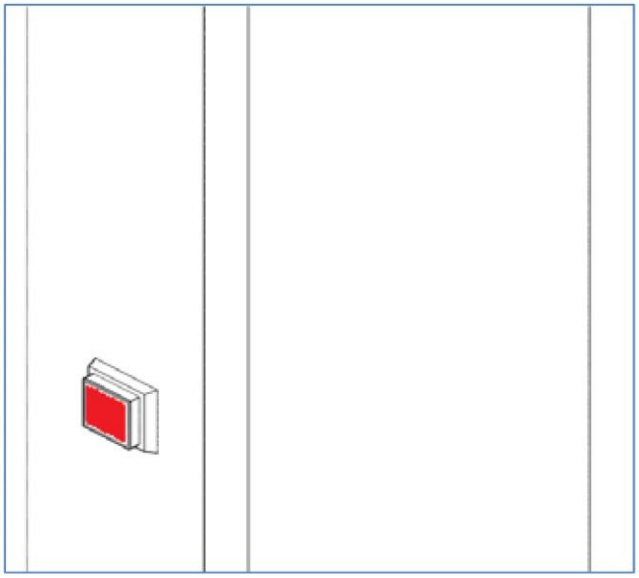

1: Interruttore ON/OFF luminoso

IR SENSORS' VERSION

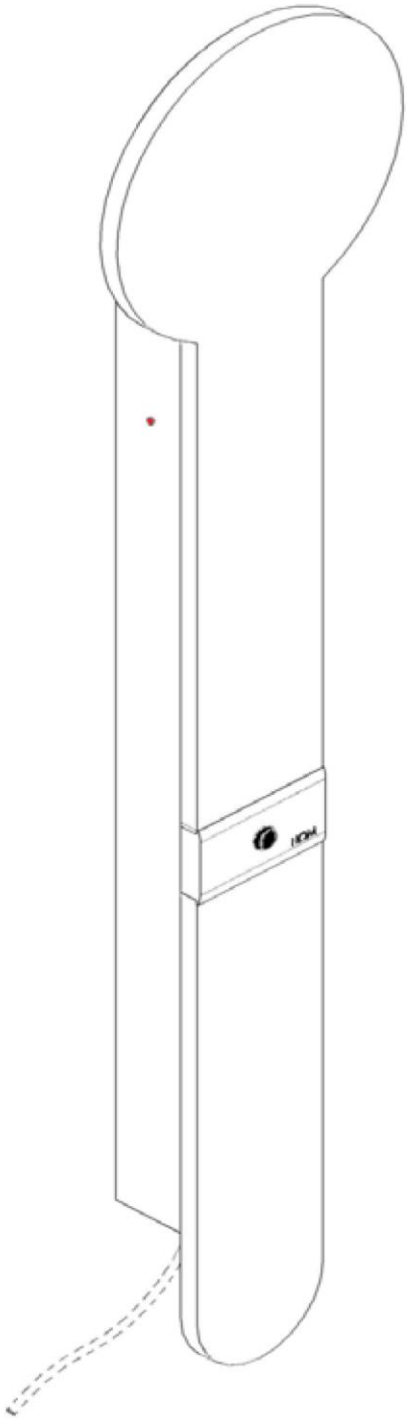

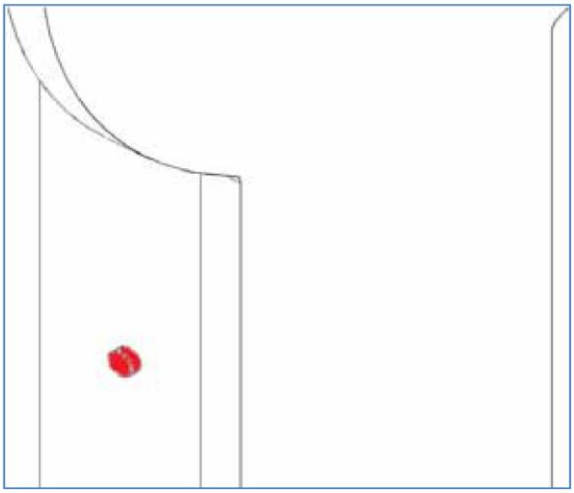

1: Heating indicator LED

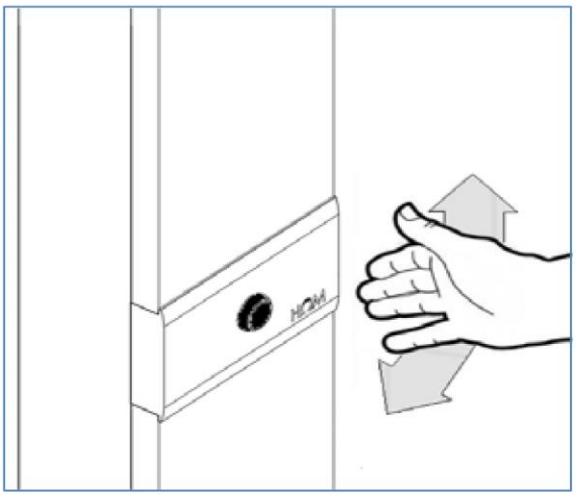

2: IR sensor (short distance)

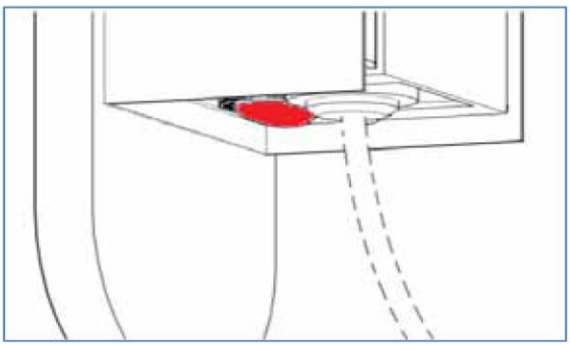

3: ON/OFF illuminated switch

SAFETY

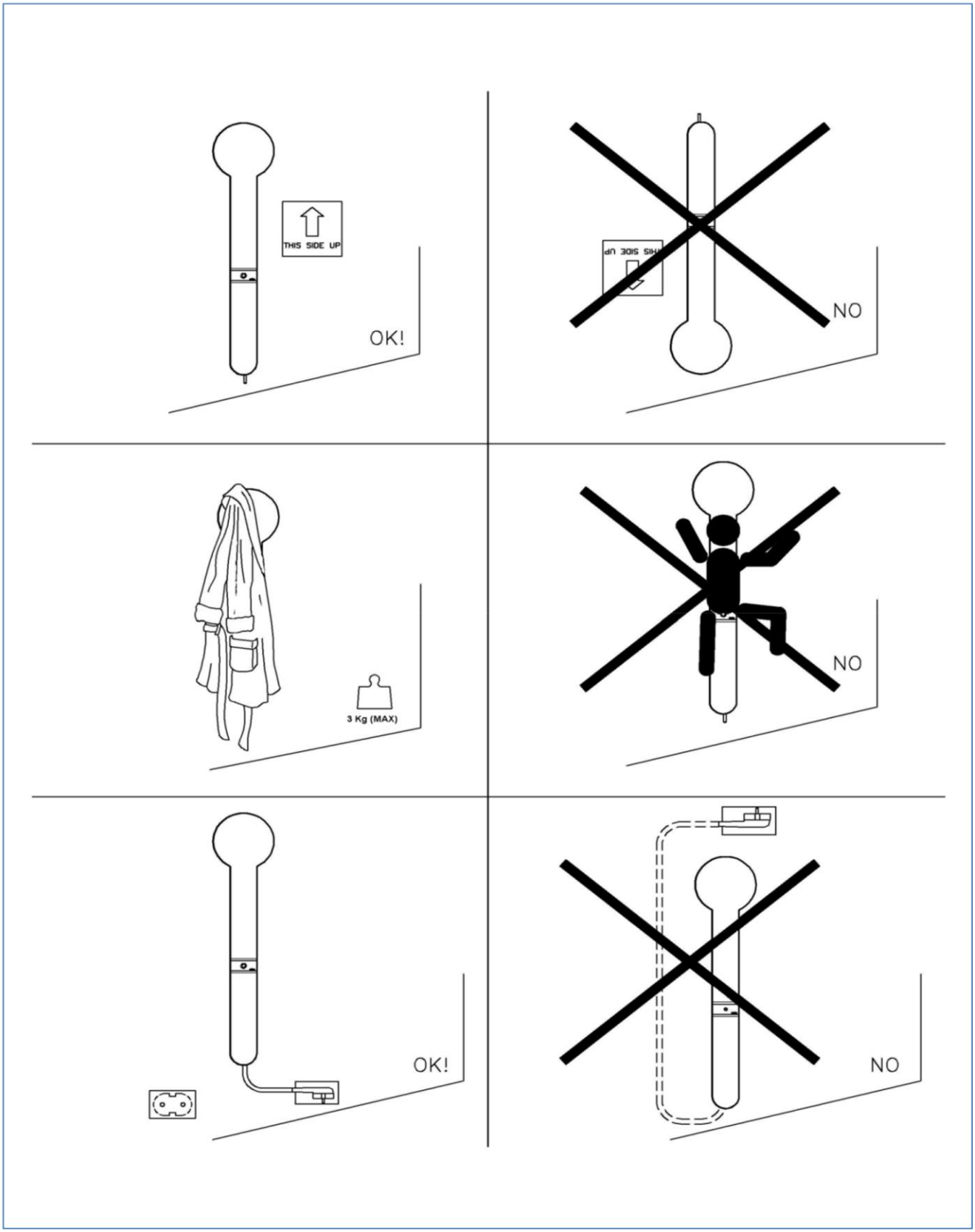

INSTRUCTION FOR USE

BEFORE USING THE PRODUCT

- Please read these instructions carefully before beginning installation to ensure the appliance is installed safety and correctly.
- Installation should be performed by qualified professional only. Local installation standards should be applied.
- Before any operation remove the packaging and check appliance integrity. If any defect or damage are noticed do not install or try to repair the appliance but inform the retailer.

  The packaging should be kept out of reach of children and disposed in accordance whit the national regulations for waste processing.
- Do not modify or disassemble the appliance. It may cause fire, electric shock or injury.
- This appliance is designed and produced for home use only and is not suitable for installing and using in public places or on vehicles, boats or aircraft.

FOR YOUR SAFETY

- Use a single-phase alternating current 230 V, 50 Hz power supply. Voltage in excess of 230 V +10 % may cause malfunction, so stay within the rated range.
- Electrical wiring work should be done by a certified professional in conformance with local standards.
- Be sure to install a ground-fault circuit interrupter with idn < 30 mA.
- This is a CLASS I electric insulation appliance and must be properly grounded.
- If the electric cable or the plug are damaged and has to be repaired do not perform this repair by yourself. Bring the product to a qualified repair centre and have them repaired by specialised personnel in order to avoid any risk of damage.
- Never use the product in rooms that are saturated with explosive gas, vapours generated by solvents or paints or any other flammable vapours or gas.
- This appliance is not intended for use by young people or by persons who possess limited physical, sensorial or mental capabilities unless they are adequately supervised by a responsible person to ensure that they can use the appliance safely. Young children should be supervised to ensure that they do not play with the appliance.
- Never allows animals or children to play with or touch the appliance.
- Attention! When turned on, the panel may become very hot.
- Attention this appliance is intended only for drying textiles washed in water.
- Never leave your home while the appliance is turned on; make sure the illuminated switch is OFF and the red light is off.

SAFE POSITIONING

- Never install the appliance on a surface made of wood or synthetic material.
- Always place this appliance in vertical position so that the supply cable results on the down side of it.
- Do not climb on the appliance.
- Never place this appliance immediately underneath a power socket.
- Always make observe the minimum distances from wall, furniture or other objects as showed (fig. A, pg. 13).
- The appliance has a grade IPX1 water protection. The product may be used in bathrooms or humid places as long as the safety zones are respected and a permanent electrical connection is performed. In any cases avoid installing the appliance in location where there is a lot of condensation.
- It must never be possible for person in the bath tub or shower to reach the power switch.

INSTALLATION

- Expansion plugs and screws, provided with the product, are only suitable for concrete or solid brick walls. For different wall material types, use the appropriate fixing means.

ELECTRICAL CONNECTIONS

- The product must be powered at a voltage of 230 Vac, 50 Hz.
- The product is supplied, depending on type:
  - with a cable ending with Schuko IPX0 plug having an integrated illuminated switch to connect to a proper efficient earthed socket;
  - with a 3 core cable for a permanent installation to the main power supply by means wires with a min. section of 1,5 mm² (Green/Yellow wire = Earth ⏚).

USE OF THE PRODUCT

ON/OFF MODEL

- By means of the illuminated switch the towel warmer can be switched on and off {ref. 1, pg. 17}.

IR SENSOR MODEL

- The product is fitted with a main on/off illuminated switch positioned in the bottom side of its {ref. 3, pg. 18}. When the switch is ON the internal control electronic is ready to operate. By passing the hand (or a towel) over the IR sensor the heating can be turned ON or OFF {ref. 2, pg. 18}. The led on the side part of the appliance indicates the heating state (red led ON → heating ON / red led OFF → heating OFF) {ref. 1, pg. 18}.

The appliance is fitted with an internal timer which turns automatically off the heating after about 180 minutes of continuous on state.

- Carefully arrange the towels without overlapping them in order to optimise drying time and appliance temperature.

MALFUNCTION EVENT

- In the event of overheating, the safety internal device automatically detaches the ceramic heater element. The radiator will start again to operate as soon as the temperature returns below the safety threshold.

If malfunction operating is noted or the damaging of the panel appear, disconnect the radiator from the main supply and contact the dealer.

CLEANING

- Avoid using acid-based product. Do not use products containing sodium hypochlorite, chlorine-based detergents, or those containing bleach or aggressive solvents that are not suitable for the cleaning of painted surfaces. Do not use abrasive sponges.

ENVIRONMENT AND RECYCLING

Please help us to protect the environment by disposing the packaging in accordance with the national regulations for waste.

Recycling of obsolete appliances

Appliances with this label must not be disposed of in general waste. The disposal of use equipment must be performed in conformity with to local regulations.

IL CALORE A PORTATA DI MANO

via Praglia, 15 - 10044 Pianezza [TO] - Italy
tel. / fax +39 011 9678803
www.homwarm.com - info@homwarm.com